Y-RE 闭心式液压缸，带接近开关

Closed-Center Hydraulic Cylinder with Proximity Bracket (75mm-125mm)

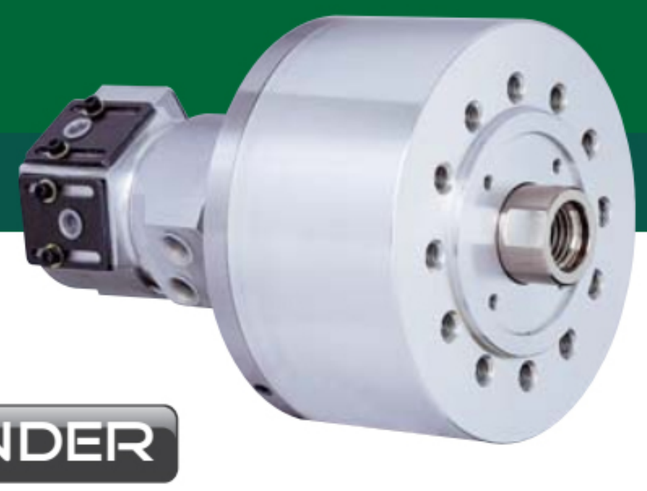

- Closed-centered hydraulic cylinder with built in lock and relief valves and proximity bracket
- 闭心式液压缸，带内置锁紧和泄放阀和接近开关

HYDRAULIC CYLINDER

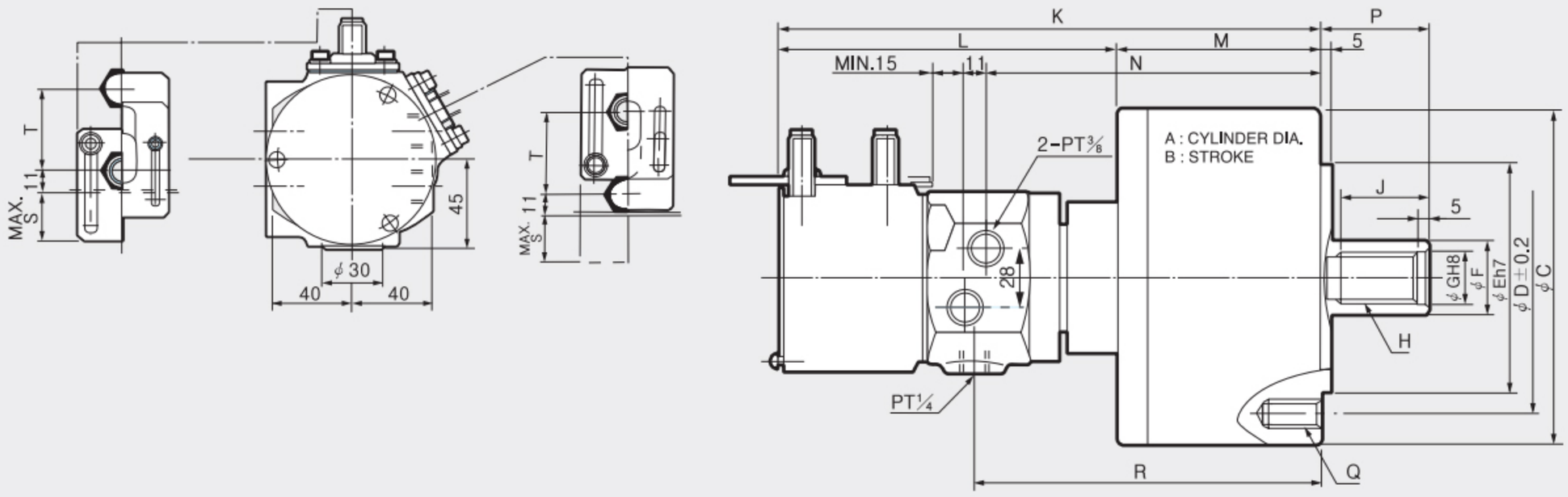

Dimensions / 치수표

	A	B	ΦC	ΦD	ΦE	ΦF	ΦG	H	J	K	L	M	N	Pmax.	Pmin.	Q	R	S	T
Y-0715RE	75	15	104	90	65	30	21	M20x2.5	32	227	161	66	127	46	31	6-M6x20	133	23	41
Y-1020RE	105	20	135	100	80	30	21	M20x2.5	35	252	163	89	152	45	25	6-M10x20	158	23	41
Y-1025RE	105	25	135	100	80	30	21	M20x2.5	35	257	163	94	157	45	20	6-M10x20	163	23	41
Y-1225RE	125	25	160	130	110	35	25	M24x3.0	44	260	163	97	160	51	26	6-M12x24	166	23	41
Y-1240RE	125	40	160	130	110	35	25	M24x3.0	44	306	194	112	175	65	25	6-M12x24	181	-	-

Specifications / 사양

Type	Piston Stroke 活塞行程 [mm]	Piston Surface Area 活塞表面积 Push [cm²]	Piston Surface Area 活塞表面积 Pull [cm²]	Piston Force 活塞力 Push [kN(kgf)]	Piston Force 活塞力 Pull [kN(kgf)]	Max. Operating Pressure 最大工作压力 [MPa(kgf/cm²)]	Max. r.p.m 最大转速 [min-¹(r.p.m)]	GD² 容许工作惯性 [N·m²(kgf·m²))]	Weight 重量 [kgf]	Total leakage 总泄露 [ℓ(min)]	KITAGAWA® Model 北川型号
Y-0715RE	15	44	37	16.6(1693)	13.9(1417)	4.0(40.8)	6000	0.118(0.012)	4.5	0.8	Y-0715RE
Y-1020RE	20	84	79	32.0(3264)	29(2957)	4.0(40.8)	6000	0.46(0.05)	7.6	0.8	Y-1020RE
Y-1025RE	25	84	79	32.0(3264)	29(2957)	4.0(40.8)	6000	0.49(0.05)	7.7	0.8	Y-1025RE
Y-1225RE	25	120	113	46.0(4692)	42(4283)	4.0(40.8)	6000	0.88(0.09)	10.5	0.8	Y-1225RE
Y-1240RE	40	120	113	46.0(4692)	42(4283)	4.0(40.8)	6000	0.88(0.09)	11	0.8	Y-1240RE

※ Specifications are subject to change without notice.
※ Maximum turning speed is based upon actual measurment.
※ Piston Force : Hydraulic 4.0MPa (40.8kgf/㎠)
※ Total leakage pressure: 3.0 Mpa (30.6 kgf/㎠) at 50 ° C.
※ Samcully Machinery Co., Ltd. is no longer an OEM manufacturer for Kitagawa® Iron Works Co., Ltd

※ 最大转速基于实际测量.
※ 技术规格若发生改变, 恕不另行通知.
※ 活塞力：液压 4.0 Mpa (40.8 kgf/cm²)
※ 總Leak量 是油压 3.0 MPa (30.6 kgf/cm²)，总油温度 50 ℃时 .
※ 目前三千里机械已不再跟日本北川進行OEM生产.